Scotsman®
Ice Systems

Service Manual for
Remote Low Side Modular Flake Ice Machine
Prodigy Plus Model FS2330LX

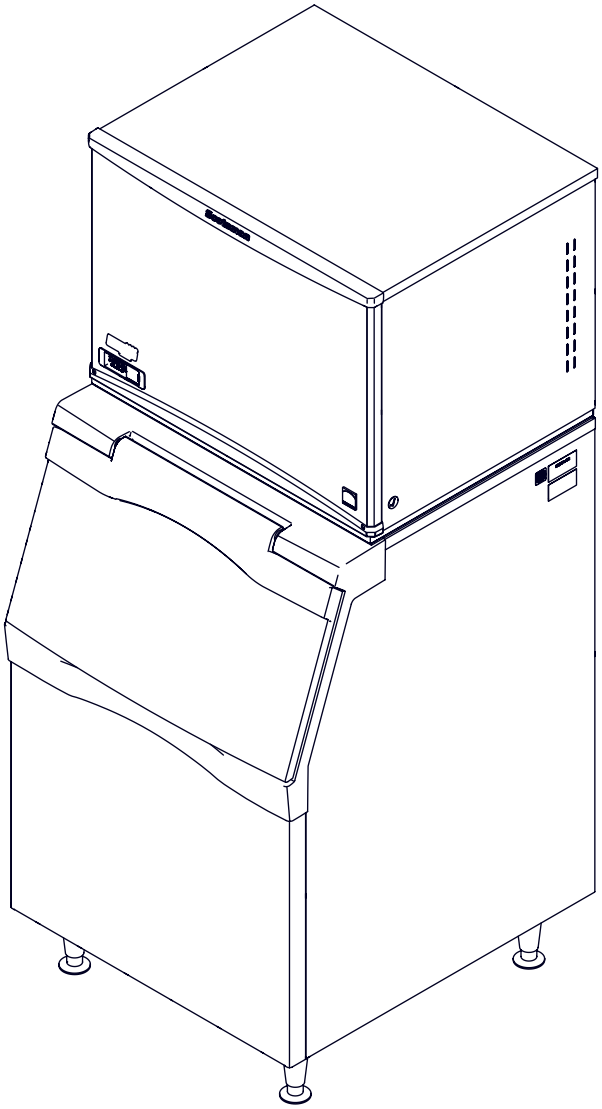

FS2330LX
Remote Low Side Service Manual
Introduction

This ice machine is the result of years of experience with flaked and nugget ice machines. The latest in electronics has been coupled with the time tested Scotsman flaked ice system to provide reliable ice making and the features needed by customers.

The features include simple conductivity water level sensing, evaporator clearing at shut down, photo-eye sensing bin control and the ability to add options.

Contents

Installation: . . . . . Page 2
Location: . . . . . Page 3
Cabinet Layout . . . . . Page 4
Unpacking & Install Prep . . . . . Page 5
Water . . . . . Page 6
Electrical . . . . . Page 7
Refrigeration . . . . . Page 8
Final Check List . . . . . Page 9
Initial Start Up and Maintenance . . . . . Page 10
Maintenance: Scale Removal and Sanitation . . . . . Page 11
Maintenance: Sensors . . . . . Page 12
Controller . . . . . Page 13
Component Indicator Lights . . . . . Page 14
AutoAlert and Display Code . . . . . Page 15
Remote Refrigeration with Condensing Unit or Rack . . . . . Page 16
Electrical Component Details . . . . . Page 17
Sequence of Operation . . . . . Page 18
Electrical Sequence . . . . . Page 19
Water System . . . . . Page 20
How Ice Is Made . . . . . Page 21
Options . . . . . Page 22
Service Diagnosis . . . . . Page 23
Repair Procedures: Bearing And Extruder . . . . . Page 24
Auger and Evaporator Inspection . . . . . Page 26
Water Seal . . . . . Page 27
Repair Procedures: The Gear Reducer . . . . . Page 28
Repair Procedures: Replace the Evaporator . . . . . Page 29

Installation:

This machine is designed to be used indoors, in a controlled environment. Operation outside the limits listed here will void the warranty.

Air temperature limits

	Minimum	Maximum
Ice maker	50°F.	100°F.
Remote condenser	-20°F.	120°F.

Water temperature limits

	Minimum	Maximum
All models	40°F.	100°F.

Water pressure limits (potable)

	Maximum	Minimum
All models	20 psi	80 psi

Water pressure limit to water cooled condenser is 150 PSI

Voltage limits

	Minimum	Maximum
208-230 60 Hz	198	253

Minimum conductivity (RO water)

- 10 microSiemens / CM

Water Quality (ice making circuit)

- Potable

WARNING: Cancer and Reproductive Harm
www.P65Warnings.ca.gov

The quality of the water supplied to the ice machine will have an impact on the time between cleanings and ultimately on the life of the product. Water can contain impurities either in suspension or in solution. Suspended solids can be filtered out. In solution or dissolved solids cannot be filtered, they must be diluted or treated. Water filters are recommended to remove suspended solids. Some filters have treatment in them for dissolved solids.

Check with a water treatment service for a recommendation.

RO water. This machine can be supplied with Reverse Osmosis water, but the water conductivity must be no less than 10 microSiemens/cm.

Potential for Airborne Contamination

Installing an ice machine near a source of yeast or similar material can result in the need for more frequent sanitation cleanings due to the tendency of these materials to contaminate the machine.

Most water filters remove chlorine from the water supply to the machine which contributes to this situation. Testing has shown that using a filter that does not remove chlorine, such as the Scotsman Aqua Patrol, will greatly improve this situation.

Warranty Information

The warranty statement for this product is provided separately from this manual. Refer to it for applicable coverage. In general warranty covers defects in material or workmanship. It does not cover maintenance, corrections to installations, or situations when the machine is operated in circumstances that exceed the limitations printed above.

While the machine will operate satisfactorily within the air and water temperature limits, it will operate more efficiently when those temperatures are nearer the lower limits. Avoid locations that are hot, dusty, greasy or confined.

Options

Ice is made until it fills the bin enough to block an infrared light beam inside the base of the machine. A field installed kit is available to adjust the maintained ice level lower. The kit number is KVS.

The standard controller has excellent diagnostic capabilities and communicates to the user through the AutoAlert light panel, seen through the front panel. Field installed kits are available that can log data and provide additional information when the front panel is removed. That kit number is KSBU. A similar kit adds network connectivity, and its number is KSBU-N.

Bin compatibility

All models have the same footprint: 30 inches wide by 24 inches deep. Confirm available space when replacing a prior model.

Bin & adapter list:

- B530P or B530S – Direct fit, no adapter needed
- B842S – KBT29
- B948S – KBT22B
- BL1048S, BL1360S and BL1660S – upright bins include filler panels to accommodate a single 30” wide ice machine. No adapter is needed.

Dispenser compatibility

Only nugget ice models may be used with ice dispensers. Flaked ice is not dispensable.

See sales literature for other brand model ice and beverage dispenser applications.

Other Bins & Applications

Note the drop zone and ultrasonic sensor locations in the illustrations on the next pages.

Scotsman ice systems are designed and manufactured with the highest regard for safety and performance.

Scotsman assumes no liability of responsibility of any kind for products manufactured by Scotsman that have been altered in any way, including the use of any part and/or other components not specifically approved by Scotsman.

Scotsman reserves the right to make design changes and/or improvements at any time. Specifications and design are subject to change without notice.

Line Set

The BRTE line set is a non-precharged tubing kit that contains a 3/8” liquid line and a 5/8” suction line. Tubes are supplied nitrogen charged and capped.

They come in four lengths:

Type of Line	Length of Line
BRTE10	10 feet
BRTE25	25 feet
BRTE45	45 feet
BRTE70	70 feet

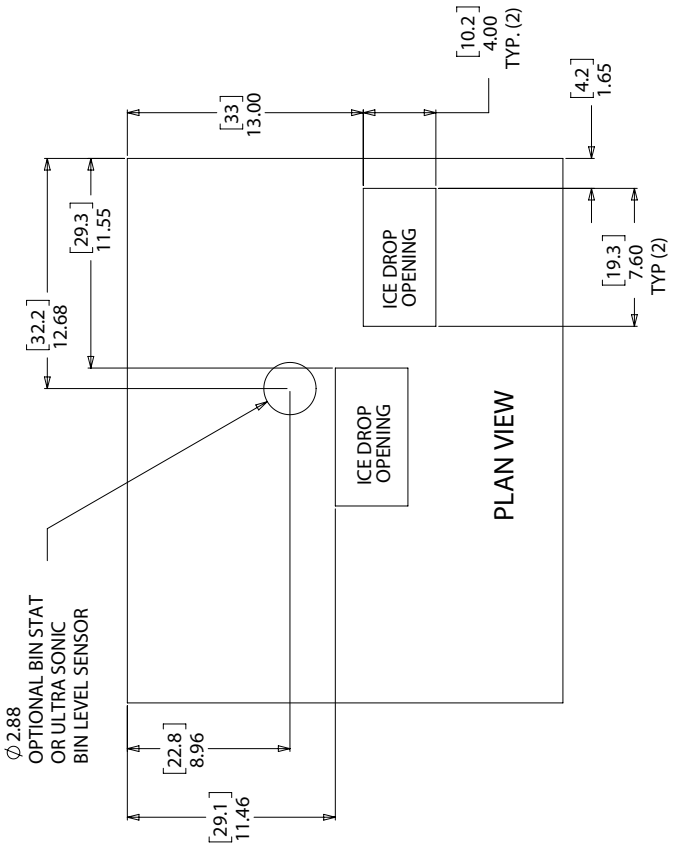
PLAN VIEW
ICE DROP OPENING
ICE DROP OPENING
[10.2] 4.00 TYP. (2)
[4.2] 1.65
[33] 13.00
[29.3] 11.55
[32.2] 12.68
[19.3] 7.60 TYP (2)
Ø 2.88 OPTIONAL BIN STAT OR ULTRA SONIC BIN LEVEL SENSOR
[22.8] 8.96
[29.1] 11.46

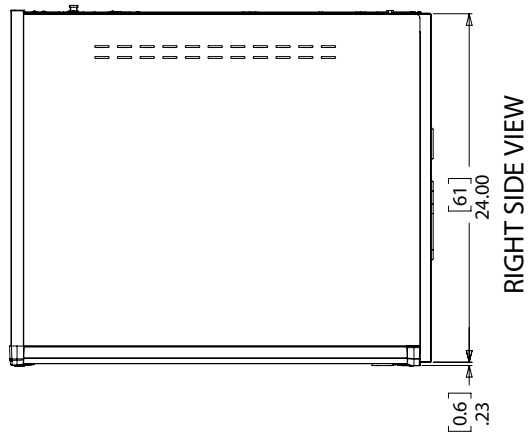
RIGHT SIDE VIEW
[61] 24.00
[0.6] .23

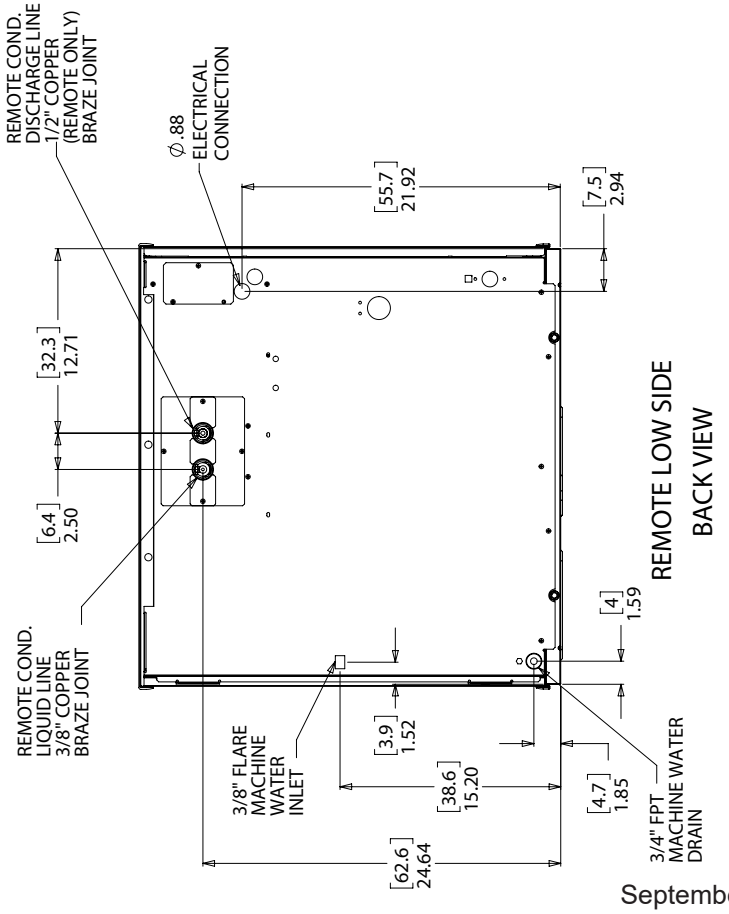
REMOTE LOW SIDE
BACK VIEW
REMOTE COND. DISCHARGE LINE 1/2" COPPER (REMOTE ONLY) BRAZE JOINT
Ø .88 ELECTRICAL CONNECTION
[55.7] 21.92
[7.5] 2.94
[32.3] 12.71
[6.4] 2.50
REMOTE COND. LIQUID LINE 3/8" COPPER BRAZE JOINT
[4] 1.59
3/8" FLARE MACHINE WATER INLET
[3.9] 1.52
[38.6] 15.20
[4.7] 1.85
3/4" FPT MACHINE WATER DRAIN
[62.6] 24.64

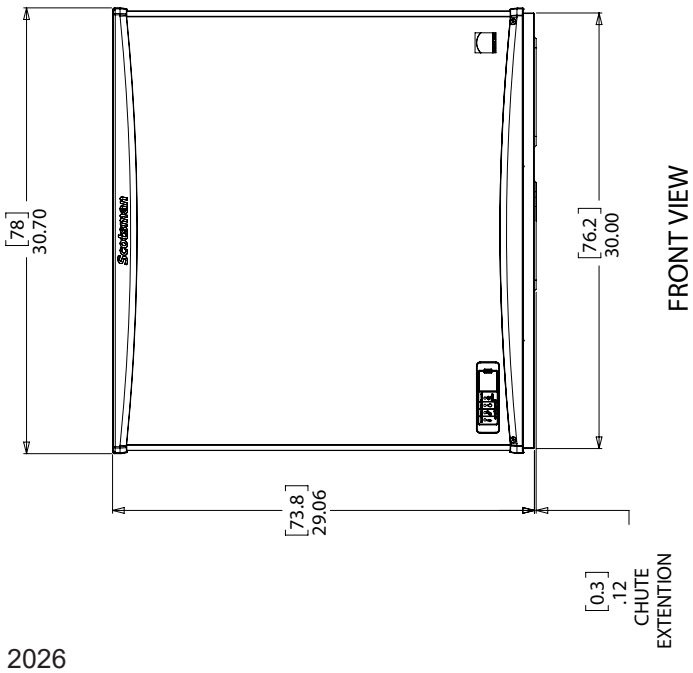
FRONT VIEW
[78] 30.70
[76.2] 30.00
[73.8] 29.06
[0.3] .12 CHUTE EXTENTION

Remove the carton from the skid. Check for hidden freight damage, notify the carrier immediately if any is found. Retain the carton for the carrier's inspection.

The machine is not bolted to the skid. If strapped remove the strap.

Place on Bin or Dispenser

If reusing an existing bin, be sure that the bin is in good shape and that the gasket tape on the top is not torn up. Water leaks, not covered by warranty, could result from a poor sealing surface. If installing a remote or a remote low side, a new bin is recommended due to the high cost to the user of replacing an old bin when a remote system is on top.

Install the correct adapter, following the directions supplied with that adapter.

Hoist the machine onto the adapter.

Note: The machine is heavy! Use of a mechanical lift is recommended.

Position the machine on the bin or adapter. Secure with straps from the hardware bag packed with the machine, or those supplied with the adapter.

Remove any plastic covering the stainless steel panels.

Remove any packaging, such as tape or foam blocks, that may be near the gear reducer or ice chute.

Level the bin and ice machine front to back and left to right by using the bin leg levelers.

Control Panel Door

The door can be moved to allow access to the on and off switches.

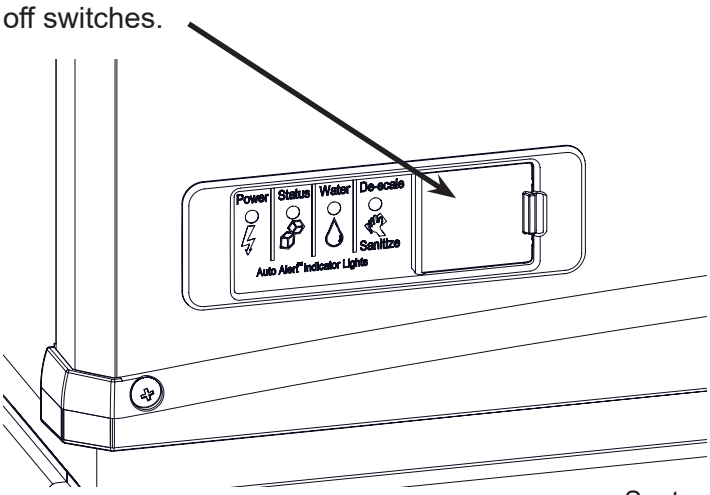

Panel Removal

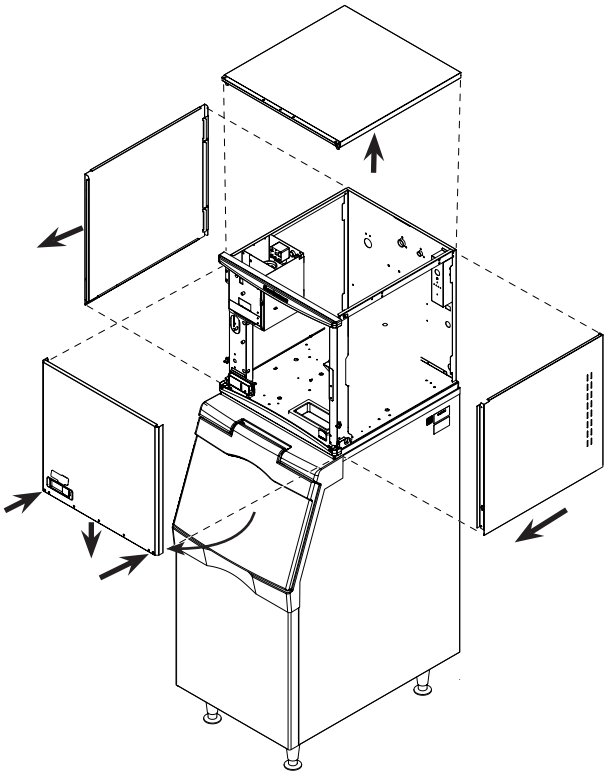

1. Locate and loosen the two screws at the bottom of the front panel.

2. Pull the front panel out at the bottom until it clears.

3. Lower the front panel down and off the machine.

4. Remove two screws at the front of the top panel. Lift up the front of the top panel, push the top panel back an inch, then lift to remove.

5. Locate and loosen the screw holding each side panel to the base. Left side panel also has a screw holding it to the control box.

6. Pull the side panel forward to release it from the back panel.

Water Supply

The water supply for ice making must be cold, potable water. There is a single 3/8” male flare potable water connection on the back panel. Water cooled models also have a 3/8” FPT inlet connection for the water cooled condenser. Chilled water can also be used for this connection.

Backflow

The design of the float valve and reservoir prevents potable water backflow by means of a 1" air gap between the reservoir's maximum water level and the float valve water inlet orifice.

Drain

There is one 3/4” FPT condensate drain fitting at the back of the cabinet. Water cooled models also have a 1/2” FPT discharge drain connection on the back panel.

Attach Tubing

Connect the potable water supply to the potable water fitting, 3/8” OD copper tubing or the equivalent is recommended.

Water filtration is recommended. If there is an existing filter, change the cartridge.

Drains - use rigid tubing: Connect the drain tube to the condensate drain fitting. Vent the drain.

Do not tee ice machine drains into the drain tube from the ice storage bin or dispenser. Back-ups could contaminate and / or melt the ice in the bin or dispenser. Be sure to vent the bin drain.

Follow all local and national codes for tubing, traps and air gaps.

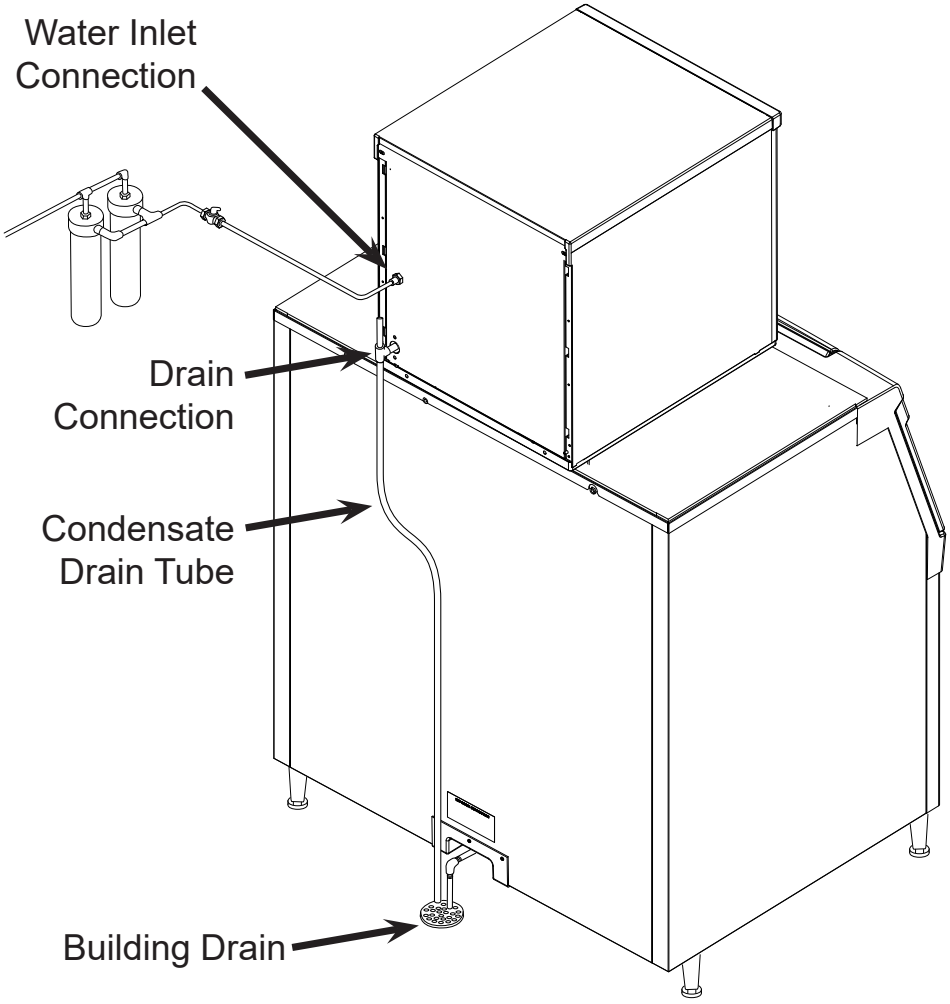

Electrical

The machine includes a power cord, connect to the proper power supply. A separate circuit is recommended to avoid unintended shut downs.

If a dedicated condensing unit is connected to this machine, it will have a separate power supply.

Do not use an extension cord.

Follow all local and national codes.

Model	Dimensions w" x d" x h"	Voltage Volts/Hz/Phase	Min Circuit Ampacity	Max Fuse Size (cord connected)
FS2330LX-32A	30 x 24 x 29	208-230/60/1	2.8	15

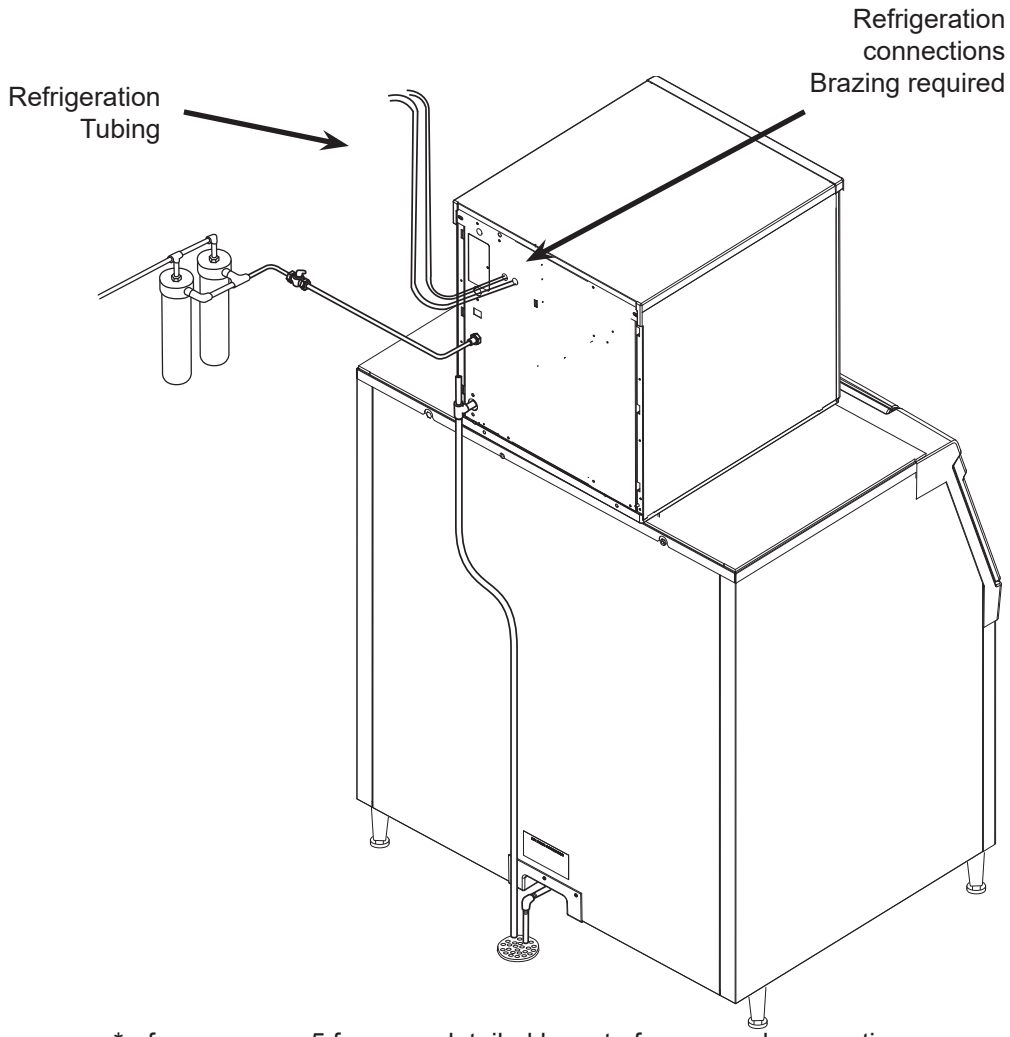

*reference page 5 for more detailed layout of rear panel connections

BTUH Capacity Requirements

Model	BTUH
FS2330LX-32A	12,000

Remote low side models require connection to a dedicated condensing unit or a rack system.

Recommended Tubing

- Suction Line: 5/8" OD
- Liquid Line: 3/8" OD

Distance limits

- Maximum distance between dedicated condensing unit and head: 75 feet.
- Maximum rise from the ice machine to the condenser is 35 physical feet

Note: Elevations greater than 20 feet require installation of a suction line trap at the 10 foot mark.

- Maximum drop from the ice machine to the condenser is 15 physical feet

Line Routing

- Do not route a line set that rises, then falls, then rises.
- Do not route a line set that falls, then rises, then falls.

Roof Attachment

Install and attach the remote condensing unit to the roof of the building, using the methods and practices of construction that conform to the local building codes, including having a roofing contractor secure the condenser to the roof.

Connections

The liquid and suction fittings on the back of the cabinet are stubs. The liquid line size is 3/8" OD. The suction line size is 5/8" OD.

1. On R-449A models recover the R-449A holding charge
2. Cut the stubs off.
3. Braze line set tubing to each fitting. Sweep with dry nitrogen while brazing.
4. Dedicated condensing unit: Evacuate complete system to 50 microns.
5. Open the ball valves.

Rack: The skills of a refrigeration technician are required to connect the ice machine to the building’s refrigeration system.

Notes:

- R-449A models: 10 ounces of R-449A refrigerant is in the system as a holding charge.
- Be sure the liquid connection is NOT in series with another liquid line valve.
- Local Codes must be observed.

After connections:

1. Wash out the bin. If desired, the interior of the bin could be sanitized.
2. Locate the ice scoop (if supplied) and have it available for use when needed.
3. Remote only: Switch on the electrical power to warm up the compressor. Do not start the machine for 4 hours.

Final Check List:

1. Is the unit located indoors in a controlled environment?
2. Has the correct electrical power been supplied to the machine?
3. Have all the water supply connections been made?
4. Have all the drain connections been made?
5. Has the unit been leveled?
6. Have all unpacking materials and tape been removed?
7. Has the protective covering on the exterior panels been removed?
8. Is the water pressure adequate?
9. Have the drain connections been checked for leaks?
10. Has the bin interior been wiped clean or sanitized?
11. Have any water filter cartridges been replaced?
12. Have all required kits and adapters been properly installed?
13. Has the ice machine been properly connected to the condensing unit or rack?

Control and Machine Operation

Once started, the ice machine will automatically make ice until the bin or dispenser is full of ice. When ice level drops, the ice machine will resume making ice.

Caution: Do not place anything on top of the ice machine, including the ice scoop. Debris and moisture from objects on top of the machine can work their way into the cabinet and cause serious damage. Damage caused by foreign material is not covered by warranty.

There are four indicator lights at the front of the machine that provide information on the condition of the machine: **Power, Status, Water, De-scale & Sanitize.**

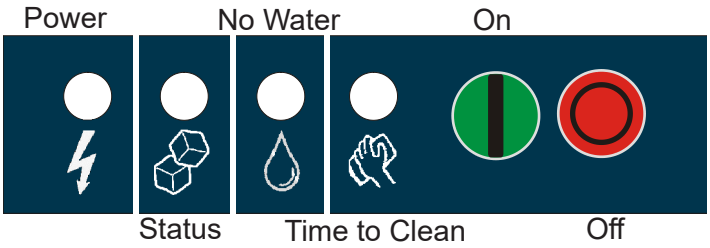

Note: If the De-Scale & Sanitize light is ON, following the cleaning process will clear the light for another cleaning time internal.

Two button switches are at the front – On and Off. To switch the machine OFF, push and release the Off button. The machine will shut off at the end of the next cycle. To switch the machine ON, push and release the On button. The machine will go through a start up process and then resume ice making.

Lower Light and Switch Panel

This user accessible panel provides important operational information and duplicates the lights and switches on the controller. It also allows access to the On and Off buttons that operate the ice machine.

Sometimes access to the switches should be limited to prevent unauthorized operation. For that purpose a fixed panel is shipped in the hardware package. The fixed panel cannot be opened.

To install the fixed panel:

1. Remove the front panel and remove the bezel.
2. Spread the bezel frame open and remove original door, insert fixed panel into bezel. Be sure it is in the closed position.
3. Return bezel to panel and install panel on unit.

Startup

1. Turn the water supply on. Remote models also open the liquid line valve.
2. Confirm voltage and switch on electrical power.
3. Push and release the On button. The machine will start in about two minutes.
4. The liquid line valve will open and liquid refrigerant will flow into the machine. For the units connected to a dedicated condensing unit, the resulting increase in suction pressure will start the condensing unit and the condensing unit will begin discharging warm air from the remote condenser. After about 5 minutes, ice will begin to drop into the bin or dispenser.
5. Check the machine for unusual rattles. Tighten any loose screws, be sure no wires are rubbing moving parts. Check for tubes that rub. Check brazed connections for leaks, retighten as needed.
6. Check suction pressure and adjust the EPR setting for optimum performance.

Note: As shipped the EPR valve should maintain low side pressure at about 36 PSIG + or - 2 PSIG.

7. Check superheat and if needed adjust to 12°F, + or - a few degrees

Note: Machines will operate and make ice at the factory EPR setting for optimum performance, adjust the EPR to the settings in the chart below:

Model Number	Ice Head EPR Setting	Superheat Setting
FS2330LX	36 PSIG	12°F, + or - a few degrees

8. Scan the QR code found behind the front panel door and complete the warranty registration online or fill out and mail the included warranty registration card
9. Notify the user of the maintenance requirements and whom to call for service.

Maintenance Types

This ice machine needs five types of maintenance:

- Remote models need their condenser coils cleaned regularly.
- All models need scale removed from the water system.
- All models require regular sanitization.
- All models require sensor cleaning.
- All models require a top bearing check.

Maintenance Frequency

Remote air cooled condenser: At least twice a year, or every time the unit is cleaned

Scale removal. To maintain proper machine performance and sanitary condition, cleaning is recommended every 6 months. The ice machine will not maintain a sanitary condition without human intervention.

The yellow Descale & Sanitize light will switch on after a set period of 6 months as a reminder to clean the machine. Some water quality conditions may necessitate cleanings as frequently as every 3 months.

Sanitizing: Every time the scale is removed or as often as needed to maintain a sanitary unit.

Sensor Cleaning: Every time the scale is removed.

Top bearing check: At least twice a year or every time the scale is removed. During the course of normal operation, some material buildup on top of the bearing is normal and should be wiped away during maintenance.

Maintenance Specifics

Maintenance: Remote air cooled condenser

The condenser fins will occasionally need to be cleaned of leaves, grease or other dirt. Check the coil every time the ice machine is cleaned.

Maintenance: Exterior Panels

The front and side panels are durable stainless steel. Fingerprints, dust and grease will require cleaning with a good quality stainless steel cleaner

Note: If using a sanitizer or a cleaner that contains chlorine on the panels, after use be sure to wash the panels with clean water to remove chlorine residue.

Maintenance: Water filters

If the machine has been connected to water filters, check the cartridges for the date they were replaced or for the pressure on the gauge. Change cartridges if they've been installed more than 6 months or if the pressure drops too much during ice making.

Note: Following this procedure will reset the de-scale and sanitize light.

Preparing to Clean

1. Remove both the front and right panels.
2. Push and release the OFF button.
3. Remove ice from bin or dispenser.
4. Remove the ice chute covers.
5. Remove the water reservoir cover.
6. Turn the water supply to the float valve off by turning the knob 1/4 turn CCW.
7. Drain the water reservoir and evaporators into a bucket using the vent tube. Return the vent tube to it's original collar bracket.
8. Using a small cup for precise pouring, add hot (100-120°F) water into the reservoir until water comes out of the top of the evaporators at the extruders, about 2qts (varies slightly by model).
9. Let hot water warm evaporators for 2-5 minutes and then drain the system (refer to step 7).
10. Loosen the thumb screw and raise the water reservoir from the "Make Ice" position to the "Clean" position.

⚠WARNING	Ice machine scale remover contains acids. Acids can cause burns. If concentrated cleaner comes in contact with skin, flush with water. if swallowed, do NOT induce vomiting. Give large amounts of water or milk. Call Physician immediately. Keep out of the reach of children.
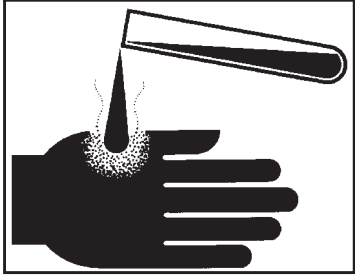	

Scale Removal

11. Prepare a solution of 32oz. Scotsman Clear One™ scale remover and 32oz. 95-115 °F. potable water.
12. Using a small cup for precise pouring, add the scale remover solution into the reservoir until the solution comes out of top of the evaporators at the extruders, about 2qts (varies slightly by model).
13. Push and release the Clean button: C is displayed and the Time to Clean light blinks. The augers will turn and circulate the scale remover for 30 minutes before shutting off. No ice is made during the cleaning cycle.
14. Lower the water reservoir back to the "Make Ice" position. Drain the water reservoir and evaporators into a bucket using the vent tube.
15. Perform a rinse of the system: turn the water supply to the float valve back on and allow the evaporators to fill. Once full, turn the water supply at the float valve off and drain the system using the vent tube. Return the vent tube to it's original collar bracket.

Sanitize

16. Create a solution of sanitizer. Mix 4oz/118ml of NuCalgon IMS and 2.5gal/9.5L of (90°F/32°C to 110°F/43°C) potable water to create a 200 ppm solution.
17. Pour the sanitizing solution into the reservoir.
18. Push and release the On button.
19. Switch the water supply to the ice machine on.
20. Operate the machine for 20 minutes.
21. Push and release the Off button.
22. Wash the reservoir cover and ice chute covers in the remaining sanitizing solution.
23. Return the reservoir cover and ice chute covers to their normal position.
24. Melt or discard all ice made during the sanitizing process.
25. Wash the inside of the ice storage bin with the sanitizing solution.
26. Push and release the On button.
27. Return the front panel to its original position and secure with the original screws

Maintenance: Sensors

Photo Eyes

The control that senses bin full and empty is a photo-electric eye, therefore it must be kept clean so it can “see”. At least twice a year, remove the ice level sensors from the base of the ice chute, and wipe the inside clean, as illustrated.

1. Remove front panel.
2. Pull photo eye holders forward to release them.
3. Wipe clean as needed. Do not scratch the photo-eye portion.
4. Return the eye holders to their normal positions and return the front panel to its original position.

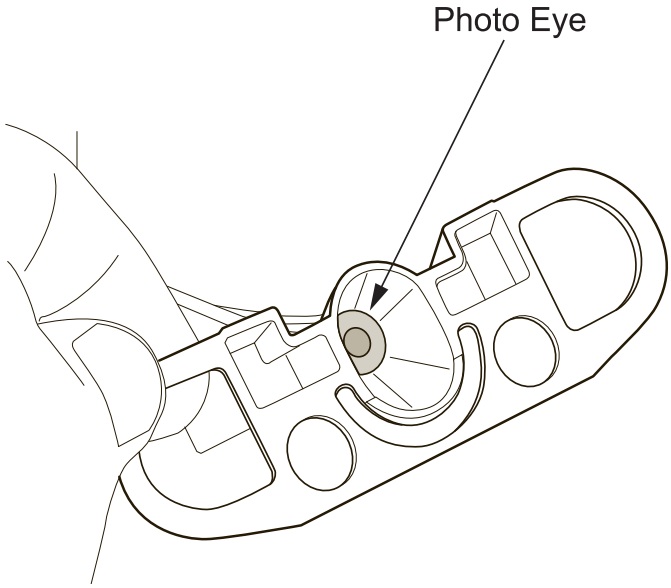

Note: Eye holders must be mounted properly. They snap into a centered position and are properly located when the wires are routed to the back and the left eye is the one with 2 wires at the connector.

Check Gear Reducer Lubricant

Although there is no normal access to the gear reducer lubricant, it can be checked without removal and complete disassembly.

Remove red vented plug from gearbox. Using a flathead screwdriver, check the oil level using the vent hole between the motor and the freezer. About 3/8” of oil should be on the tip of the screwdriver blade. Any more and there may be water in the gear case, any less and it may be low. The correct oil charge is 14 ounces. See picture to right.

Water Probe

The ice machine senses water by a probe located near the water reservoir. At least twice a year, the probe should be wiped clean of mineral build-up.

1. Shut off the water supply.
2. Remove front panel.
3. Remove the hose from the water sensor, use a hose clamp pliers for this.
4. Loosen mounting screw and release the water sensor from the frame of the unit.
5. Wipe probes clean.

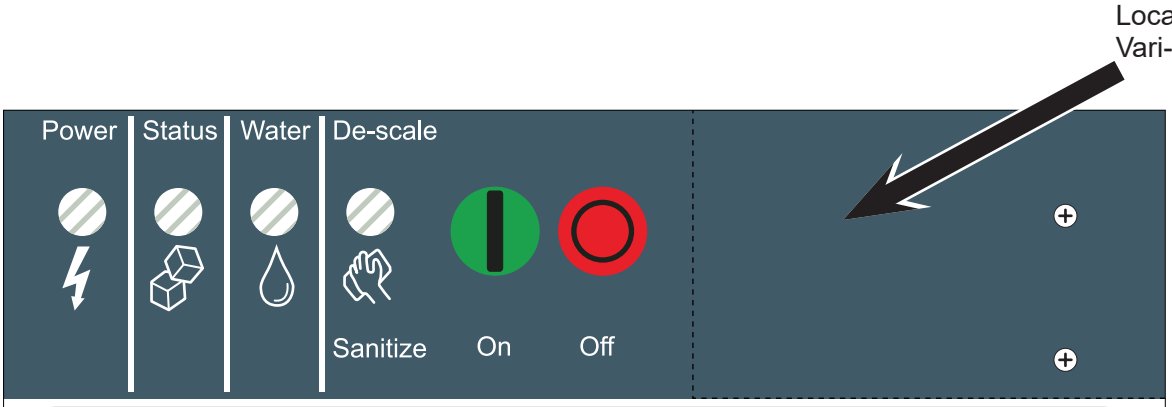

Clean

Code Display

Control Operation - See Manual

Water Light On - Restore water supply to machine.

De-Scale Light On - Clean and sanitize machine.

Test Mode - Depress Off for 3 seconds, then depress Clean for 3 seconds

Recall Diagnostic Codes - Depress Off for 3 seconds. Press Clean repeatedly to go from most recent to oldest of 10.

Clear Diagnostic Codes - Switch unit off, depress and hold Clean and Off for 3 seconds.

Reset from Codes 1, 2, 3, 4, 5, 7, 8 or 9 - Depress Off then Depress On.

Code	Description
F	Freeze Mode
F flashes	Freeze Mode is Pending
b	Bin is Full
C	Clean Cycle
L	Board Locked
d	Test Mode
0	Off
E	Self Test Failed
1 flashes	No Ice Sensed, Left - Retrying
1	No Ice Sensed, Left - Shut Down
2 flashes	Auger Motor High Load, Left - Retrying
2	Auger Motor High Load, Left - Shut Down
3	No Water in Reservoir
4	Refrigeration Pressure too High / Low
5 flashes	No Ice Sensed, Right - Retrying
5	No Ice Sensed, Right - Shut Down
7 flashes	Auger Motor High Load, Right - Retrying
7	Auger Motor High Load, Right - Shut Down
8 flashes	No Ice Sensed, Both - Retrying
8	No Ice Sensed, Both - Shut Down
9 flashes	Auger Motor High Load, Both - Retrying
9	Auger Motor High Load, Both - Shut Down

Component Operation Indicator Lights

02-5132-01

Location of Optional
Smart-Board

The controller has six lights to indicate component operation:

Auger Left

• This light is ON when the left auger motor is operating.

Auger Right

• This light is ON when the right auger motor is operating.

Bin Eyes Blocked- L

• This light is ON when the left photo-electric ice sensors have been blocked by ice.

Bin Eyes Blocked - R

• This light is ON when the right photo-electric ice sensors have been blocked by ice.

Compressor

• This light is ON when the condensing unit the ice maker is connected to should be operating

Water Present

• This light is ON when the water sensor has water touching it.

.

Control Button Use

Recall diagnostic code:

• Hold off button in for 3 seconds. Release.

• Press and release the Clean button to cycle through each of the last 10 error codes from most recent to oldest.

Clear diagnostic code:

• Hold Clean and Off buttons in for 3 seconds to clear all prior codes.

Reset control:

• Depress and release Off, then depress and release On

Start Test Mode:

• Hold Off button in for 3 seconds. Release.

• Hold Clean button in for 3 seconds. Release.

Lock / Unlock control:

• Hold On button in for 3 seconds, keep holding then press and release Off twice.

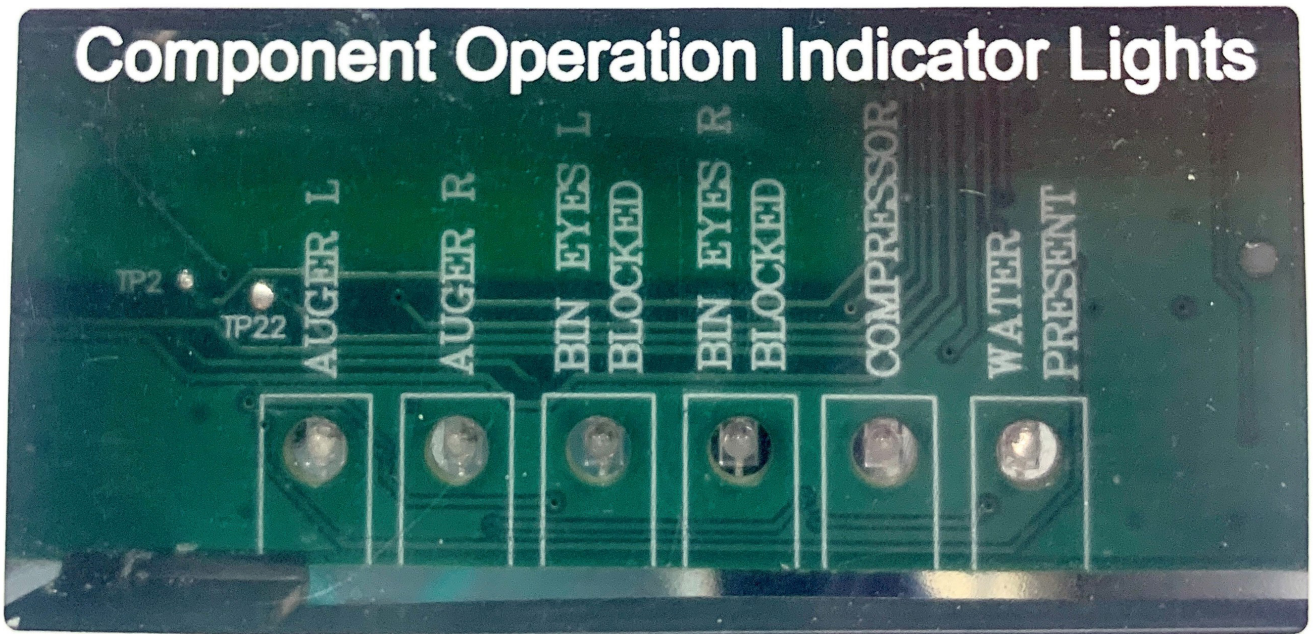

The controller uses indicator lights to provide the user with information on Power, Status, Water or Time to Clean. These are known as the AutoAlert panel.

Additionally a 7 segment display is under the front panel. It shows operational status or problem codes.

The Power light is on Green anytime the machine is supplied with electrical power.

The Status light is on Green when the machine has been switched to the ice making mode. It will also blink green if the unit has been equipped with an optional Smart-Board AND the Smart-Board has detected potential malfunction.

The Water light will blink Red if the water sensor does not detect water.

The De-Scale / Sanitize light will glow Yellow when the time to clean timer has reached its set time since the last cleaning. It also blinks during the first part of the cleaning mode

Code Description

F. . . . . Freeze Mode

F flashes . . Freeze Mode is Pending

b. . . . . Bin is Full

C. . . . . Clean Cycle

L. . . . . Board Locked

d. . . . . Test Mode

0. . . . . Off

E. . . . . Self Test Failed

1 flashes. . No ice sensed - Retrying

1. . . . . No ice sensed - Shut Down

2 flashes . Auger motor high load - Retrying

2. . . . . Auger motor high load - Shut Down

3. . . . . No water in reservoir

4. . . . . Refrigeration pressure too high / low

5 flashes . . No Ice Sensed, Right - Retrying

5 . . . . . No Ice Sensed, Right - Shut Down

7 flashes . . Auger Motor High Load, Right - Retrying

7 . . . . . Auger Motor High Load, Right - Shut Down

8 flashes . . No Ice Sensed, Both - Retrying

8 . . . . . No Ice Sensed, Both - Shut Down

9 flashes . . Auger Motor High Load, Both - Retrying

9 . . . . . Auger Motor High Load, Both - Shut Down

Remote Refrigeration with Condensing Unit or Rack

A condensing unit's compressor concentrates the heat from ice making into high pressure, hot discharge gas. The high pressure forces the gas to the condenser.

At the remote condenser, the discharge gas will either enter the coils or bypass them through the headmaster. The head master maintains a minimum discharge pressure to keep flash gas out of the liquid line.

From the condenser, refrigerant flows to the receiver. It can be either liquid or gas, depending upon the modulation of the head master.

From the receiver, liquid refrigerant flows to the ice making head's thermostatic expansion valve. At the expansion valve, liquid refrigerant passes from a high pressure zone to one of relatively low pressure, and in the low pressure zone it evaporates, absorbing heat.

From the evaporator, the refrigerant, carrying the heat from ice making, flows back to the compressor through the suction line, and the cycle continues.

The EPR valve in the ice machine keeps the suction pressure at the correct pressure, regardless of a lower pressure in the suction line between the ice machine and the condensing unit or rack.

When enough ice has been made, the control system closes the liquid line solenoid valve and the condensing unit, when used, pumps down (a rack will likely continue to operate), forcing refrigerant out of the low side until its pump down pressure switch stops the compressor.

Liquid line valve

- Opened by the controller to start ice making.
- Closed to shut unit off. Line voltage coil.

Controller

- Senses water, ice making, and auger amps.
- Controls liquid line solenoid coil and auger motor.
- Indicates status and component operation.

Transformer

- 12 volt secondary, supplies power to controller only. The Power light will be ON when the transformer has provided 12 volts AC to the controller.

Water Level Sensor

- Two probe conductivity sensor. When water touches it the Water Present light will be ON.

Auger Motors

Four pole, split phase motor that operates each gear reducer. When operating, the Auger indicator light will be ON. The gear reducer lowers the input speed from about 1500 RPM to about 11-13 RPM. Auger rotation is counter clockwise when viewed from above.

Photo-electric eyes - 1 set per ice making section

- An LED emitter and photo transistor receiver set. Pulsed infrared light is continuously emitted and received to detect ice in the chute.

Lower light and switch panel

- Duplicates controller lights and switches.

The ice machine's function is to continuously produce ice until the ice level control senses that there is enough ice in the bin or dispenser. There are three systems that operate in close coordination to make ice. They are the electrical system, the water system and the refrigeration system.

The electrical system includes the auger drive assemblies, control system (an auger drive assembly includes the gear reducer, auger and bearings).

The water system includes the float valve, reservoir, inside of the evaporators and the drain tubing.

The refrigeration system includes the external condensing unit, expansion valve and outside of the evaporators.

Control System

As noted, the electrical system includes a control system. The control system consists of a controller and sensors. It automatically operates the machine to make ice only when needed. It also monitors the refrigeration system, water system and auger drive assembly for proper function.

Sensors are used to monitor the machine. A continuity probe water sensor is located near the float reservoir. A tube from the float tank allows water to touch the sensor's two stainless steel probes, making a connection between them. That signals to the controller the presence of water. The controller will not allow the machine to make ice unless this sensor's probes have continuity.

A set of photo-electric eyes (infrared emitter and receiver) is located at the base of each ice discharge chute. They are used to sense ice. As ice is made, it falls through the infrared beam from the emitter, causing the receiver to detect it. When ice has filled the bin, the top of the ice pile will continuously stop the beam, breaking the light to the receiver, and that signals to the controller that the bin is full under that ice drop zone, however the controller will not shut off ice making unless both ice sensor sets have indicated bin full.

Additionally, the control system uses the photo-eyes to confirm ice making. As the machine makes ice, the falling ice causes breaks in the infrared beam of each ice sensor set. In operation, the first 6 minutes of ice making are ignored to give the machine time to start producing ice. After that, the controller will look for a minimum of one beam-break in 10 minutes. If this is not achieved, the control will shut the machine down for 10 minutes and add the incident to a strike counter. During the wait period, a 1 will be flashing in the code display.

After the 10 minute wait, the machine will restart. If no ice is sensed three times in a row, the machine will shut down on a no ice error and must be manually reset. The 1 in the code display will change from flashing to continuous.

If ice is detected within 10 minutes after any restart, the strike counter will be reset to zero, and the code display will show F, for freeze mode.

Each auger drive motor amperage is monitored by the controller. If an auger motor is overloaded and is drawing too many amps, the controller will shut the machine off, and a 2 will be flashing in the code display. The controller will attempt a restart of both auger motors in 4 minutes. If during the first 60 seconds after restart the auger motor current stays within limits, the compressor is restarted and the machine returns to normal operation. If the auger motor's current is excessive within 60 seconds after the restart, the process will be repeated once more. If during that try the current is still excessive the machine shuts down and must be manually reset. The 2 in the code display will change from flashing to continuous.

Water System

The water level in the evaporator is maintained by a float valve in a separate reservoir. As ice is made, and water is used, the water level in the reservoir drops, opening the float valve. The open valve adds water to the reservoir to resupply it.

Pushing and releasing the On button starts the machine.

The sequence of operation begins with water. Water must be sensed or the controller will not start the ice making process. If there is no water, a 3 will show it the code display. If there is water, and there is nothing blocking the infrared beam of the ice sensors, the controller will start the machine.

A flashing F will show in the code display while the auger drive motors start up. When successfully started, the liquid line valve will open, and the flashing F will change to a continuous F.

This continues until the both ice level controls sense a full bin, at that time the liquid line valve is shut off, and the auger motors continues to operate for a short time to clear the evaporator of any left over ice. A lowercase “b” will show in the code display.

	Indicator Lights & Their Meanings			
	Power	**Status**	**Water**	**De-Scale & Sanitize**
Steady Green	Normal	Normal	-	-
Blinking Green	Self Test Failure	Switching on or off. When Smart-Board used, machine attention recommended.	-	-
Blinking Red	-	Diagnostic shut down	Lack of water	-
Yellow	-	-	-	Time to descale and sanitize
Blinking Yellow	-	-	-	In Cleaning Mode
Light Off	No power	Switched to Off	Normal	Normal

Water System

Water enters the machine through the 3/8" male flare at the rear of the cabinet, goes to the water reservoir which it enters through the float valve.

The float valve maintains a constant level of water in the reservoir and evaporator, as water flows out the bottom of the reservoir tank to fill the evaporator.

Reservoir overflow or evaporator condensation is routed to the drain.

Water Level: The correct water level should be checked when the machine is making ice. Check the water level in the reservoir and compare it to the horizontal line molded into the side of the reservoir.

The correct level should be between 1/8” above and 1/4” below the line. If needed, bend the float arm up or down to adjust the water level.

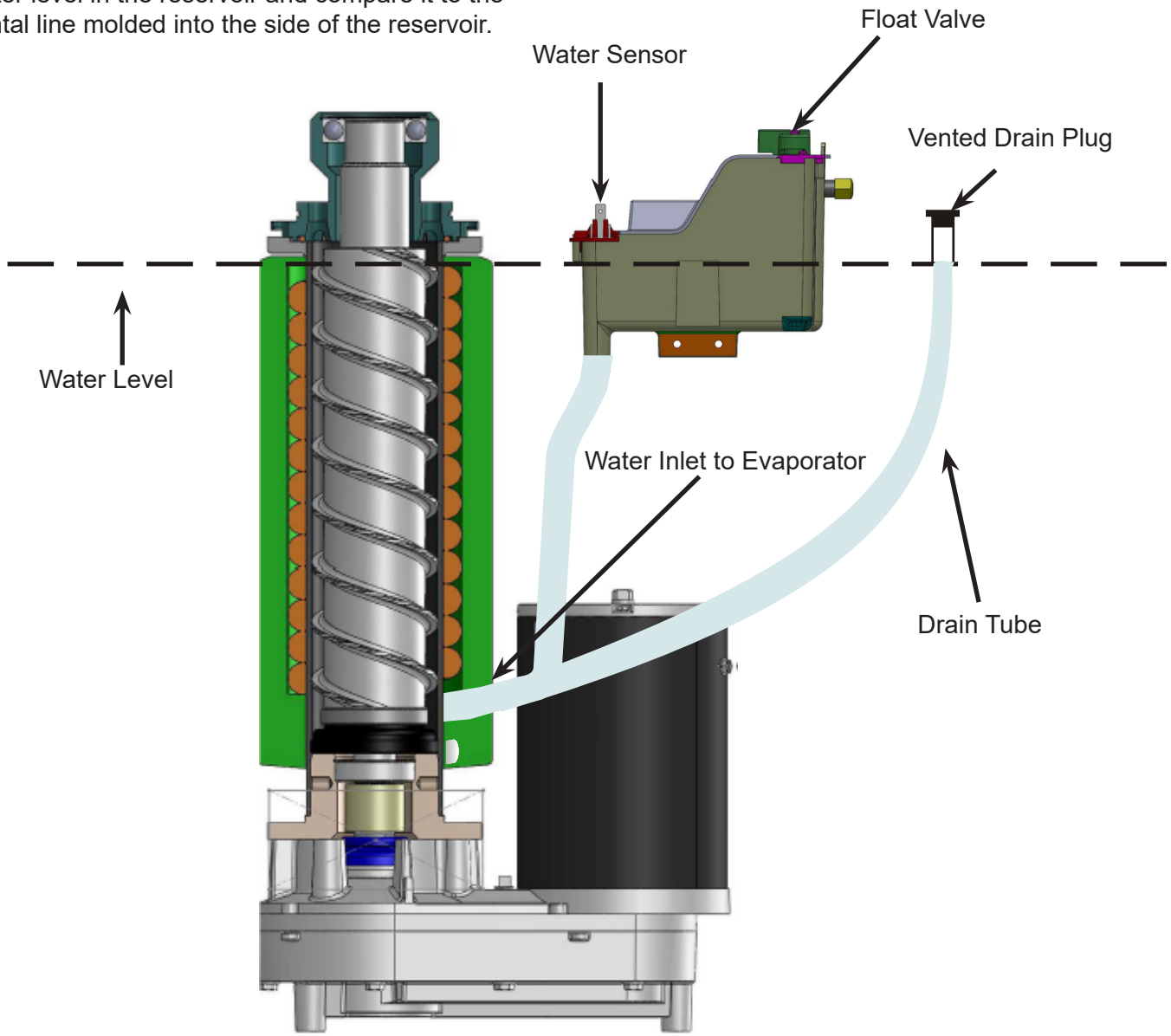

Refrigeration effect is applied to the water between the auger and the evaporator. When that water's temperature drops to its freezing point, ice crystals form throughout it. A continually rotating auger moves the ice up the evaporator tube. At this point the ice is a soft ribbon that fills the space between the auger and evaporator.

At the top of the evaporator tube, ice emerges from the water and is forced or extruded through relatively small openings. This has the effect of squeezing out excess water and compressing the ice together into a useable form.

Ice flowing from the openings is forced to one side, breaking it into smaller lengths. An ice sweep moves them to the chute.

Flaked ice machines have 6 oblong and curved slots that ice flows from, and they produce a softer, wetter ice form.

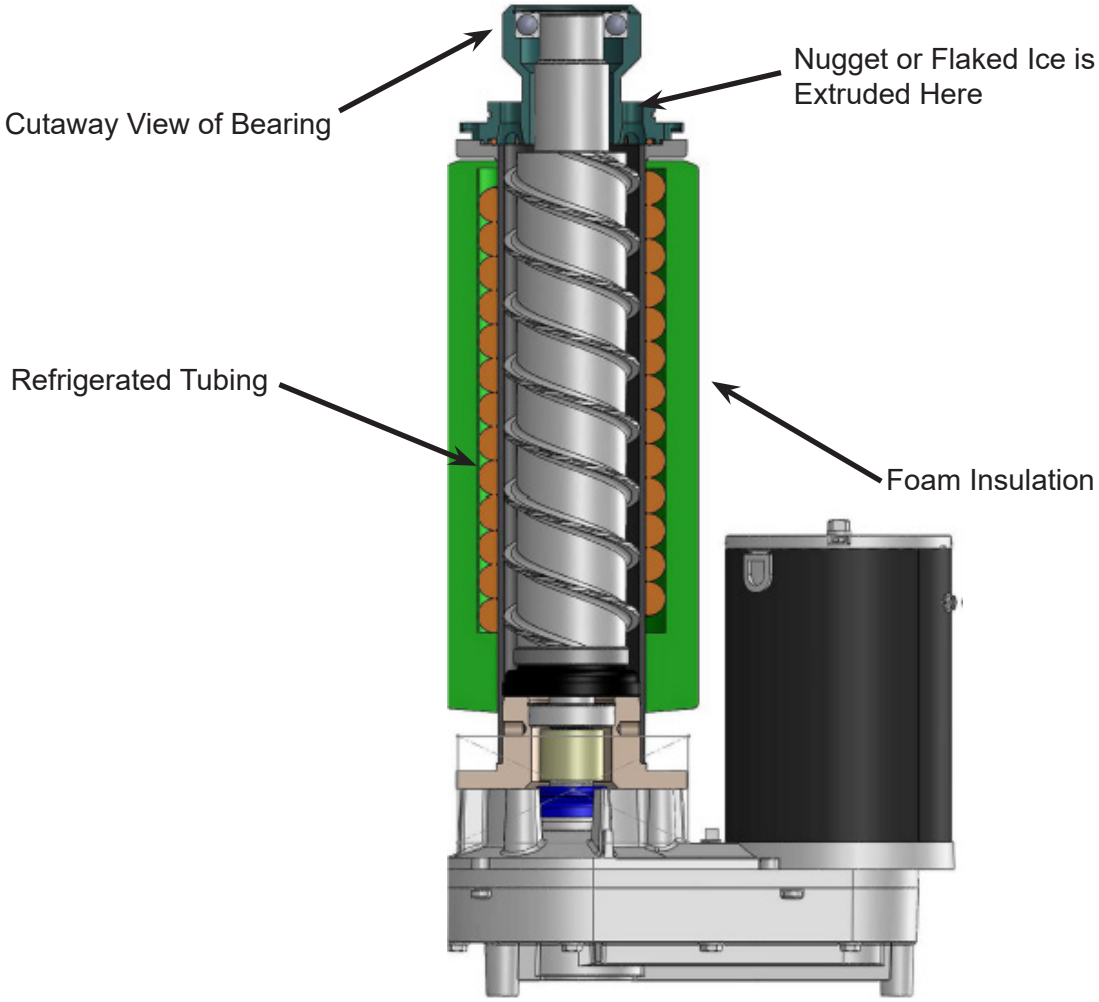

Vari-Smart

Optional adjustable ice level control (KVS). When this option is present there is an adjustment post and an additional indicator light to the right of the four indicator lights mentioned earlier.

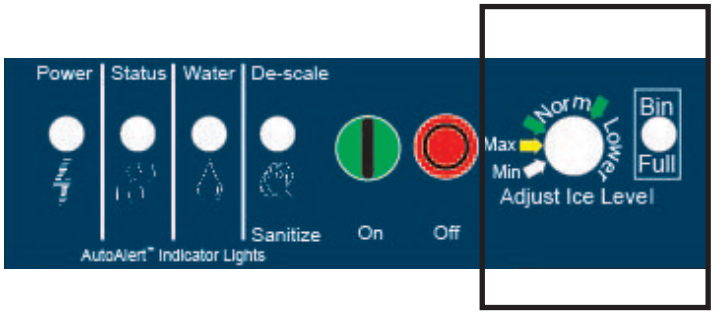

The ultrasonic ice level control allows the user to control the point that the ice machine will stop making ice before the bin or dispenser is full.

Reasons for this include:

- Seasonal changes in ice used
- Planning to sanitize the bin
- Faster turnover for fresher ice
- Certain dispenser applications where maximum ice level is not desired

Use of Adjustable Ice Level Control

There are several positions the ice level can be set to, including Off or Max (knob and label indicators lined up), where it fills the bin until the standard bin control shuts the machine off. See the kit's instructions for complete details including special instructions for dispenser applications.

Rotate the adjustment post to the desired ice level.

The machine will fill up to that level and when it shuts off the indicator light next to the adjustment post will be On.

Note: The maximum fill position is when the arrow on the knob points to the arrow on the label.

Symptom	Probable Cause	Possible Correction
No ice	No power	Check that ice machine and condensing unit, if used, both have power. If power light is out, check transformer.
	Code 3: No water	Restore water
	Status light is off	Push and release ON switch
	Code 1: No ice sensed	Check for ice flow down chute. if very slow or no ice being made, check water inlet tubing for restriction; check for condensing unit or refrigeration system failure
		Check auger motor for power, if no power, check controller component indicator light. If there is power to the motor, check motor windings
	Code 2: Auger motor draws too many amps, controller shuts unit off.	Check that liquid line valve shuts off tightly
		Check for damage to gear reducer or auger bearings.
	Bin Eyes Blocked light is On	Ice is in the chute.
		No ice in the chute. Check position of sensors, check sensors for scale build up
	Everything is in operation, but no refrigeration effect	Check liquid line valve of condensing unit.
		Check condensing unit
		Check TXV
		Check refrigerant charge
Low ice making capacity	Scale build up	Remove scale from evaporator and water system
	Restricted water supply to evaporator	Squeeze hose, if bubbles appear revise hose and reservoir
	Suction tubing kinked	Check suction tubing
	Expansion valve superheat incorrect	Check superheat

Extruder:

1. Remove panels and disconnect electrical power.
2. Turn off the water to the machine, and unclip the evaporator drain hose, pull it down and drain the evaporator into the bin or a container.
3. Push back bail clamp and remove ice chute cover.
4. Unscrew and remove ice sweep.
5. Remove ice chute body and insulation collar.
6. The extruder/bearing assembly may now be removed:

- a. Unscrew 4 allen (1/4”) head screws holding extruder to evaporator and remove extruder

Note: The extruder may be removed from the evaporator without disturbing the auger and should be avoided unless the water seal is being replaced..

7. Reverse to reassemble:

- Inspect and replace parts as needed, including ice chute o-ring
- Torque all 4 allen head cap screws to 12.5 ft-lbs.

6. Service the bearing. Check for rust, rough spots, excessive play, or damage to bearing seals..

Auger:

1. Go thru the process of removing the extruder.
2. The auger may now be easily removed by hand

Note: If the auger is stuck, a slide hammer can be used. Thread the slide hammer into the threaded hole on top of the auger where the sweep goes. The size of that hole is 1/2”-13

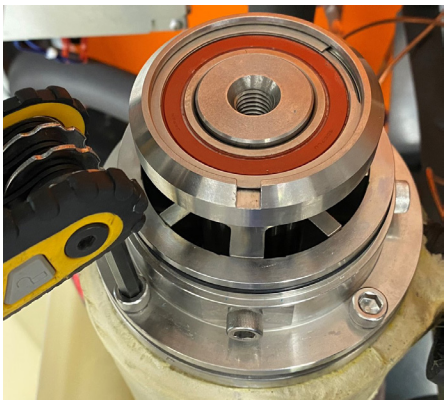

Top Bearing:

Note: Scotsman service recommends changing BOTH top and bottom bearings if one must be changed.

1. Go through steps 1-4 of removing the extruder
2. Inspect the bearing for any rust, rough spots, excessive play, or damage to the bearing seals.
3. If bearing replacement is required, finish prior steps 5 and 6 to remove the extruder.

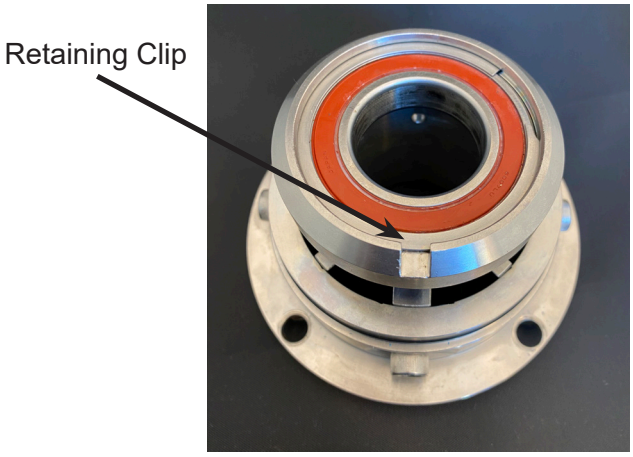

4. Remove the clip holding the bearing.
5. Tap out the old bearing. Bearing removal may require a press. Replacement of full extruder and bearing assembly is available and would not require a press.
6. Use the old bearing as something to press on and drive the new bearing into the extruder.
7. Reinstall the clip.
8. Reattach the extruder to the evaporator.

Bottom Bearing:

1. Go thru the process of removing the auger.
2. Remove the foam wrap at the bottom of the evaporator.
3. Remove the 4 allen (1/4”) head screws at the bottom of the evaporator.

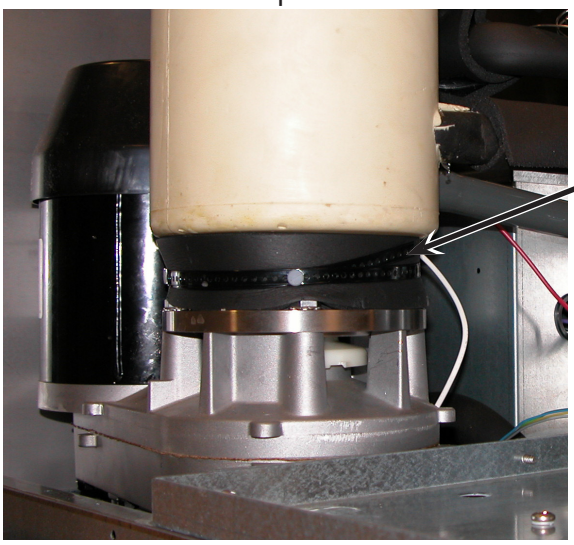

4. Remove the bolts holding the bearing retainer to the gear reducer.

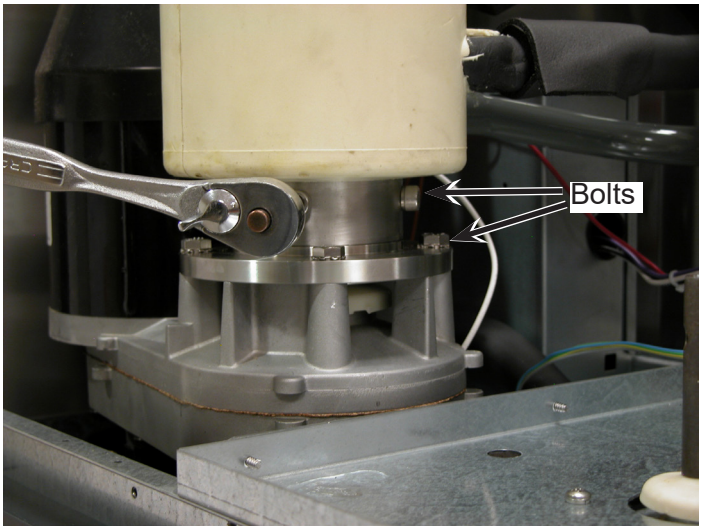

5. Separate the gear reducer, evaporator and bearing retainer.
6. Remove the clip.

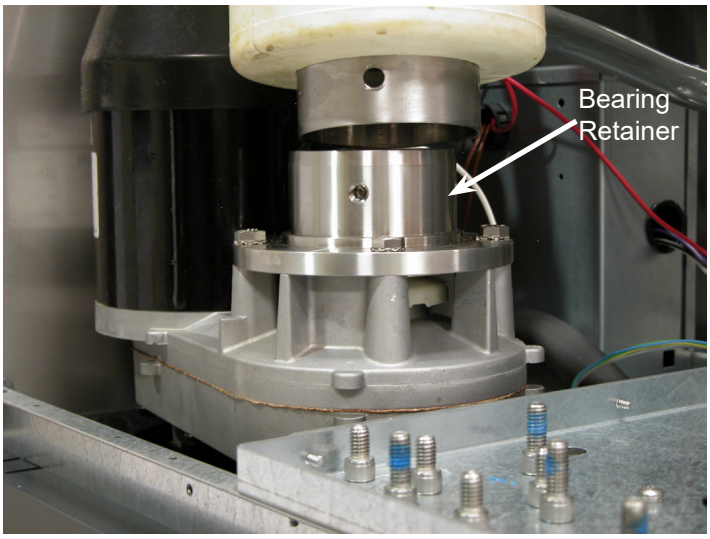

7. Tap out the old bearing from the bearing retainer. May require a press.
8. Use the old bearing as something to press the new bearing on and drive the new bearing into the bottom bearing retainer.
9. Reverse to reassemble:

- Torque all 4 allen head screws to 12.5 ft-lbs.

Auger and Evaporator Inspection

The auger must be carefully inspected for wear and scale. The wear areas are the top bearing surface, drive junction and the edges of the flights. The edges of the auger have horizontal serrations and there are highly machined areas in between. If the auger has contacted the evaporator wall, it will have very rough flight edges and should be replaced.

Scale forms on the auger during normal ice making. If scale is still on the auger after cleaning in the ice machine, the scale can be removed using ice machine cleaner and a nylon scrub pad.

Inspect the auger, the critical areas of the auger are:

1. The auger body. It should be clean and shining. Sometimes an auger will appear clean when wet, but after it is dry it will appear stained. Scrub the auger with ice machine cleaner and hot water.

Caution: Ice machine cleaner is an acid. Handle it with extreme care, keep out of the reach of children.

---

2. The water seal area. Because the auger has been removed, the water seal will have to be replaced. Remove the water seal top half from the auger, and remove any sealant or debris from the shoulder of the auger where the water seal was.

Inspect the evaporator's interior. The interior is stainless steel that should be bright and shiny when dry. If it isn't the scale on the surface must be removed. To remove scale:

1. Remove the water seal; it will have to be replaced.

2. Use a nylon brush and scrub the interior of the evaporator vertically to remove any scale.

3. Clean up any debris from the top of the gear reducer.

Example of a clean auger

Example of Scale Build Up on Evaporator Wall

Water Seal

1. Go through all steps to remove the auger.
2. Remove the 4 allen head screws at the bottom of the evaporator.
3. Lift the evaporator up and off the bottom bearing retainer.
4. Push the water seal up on one side until it twists, grab it and pull it out.
5. Remove the rotating half from the bottom of the auger.
6. Clean the auger shoulder and add a very thin bead of food grade sealant to the bottom of the auger. (732 RTV or Scotsman part number 19-0529-01)

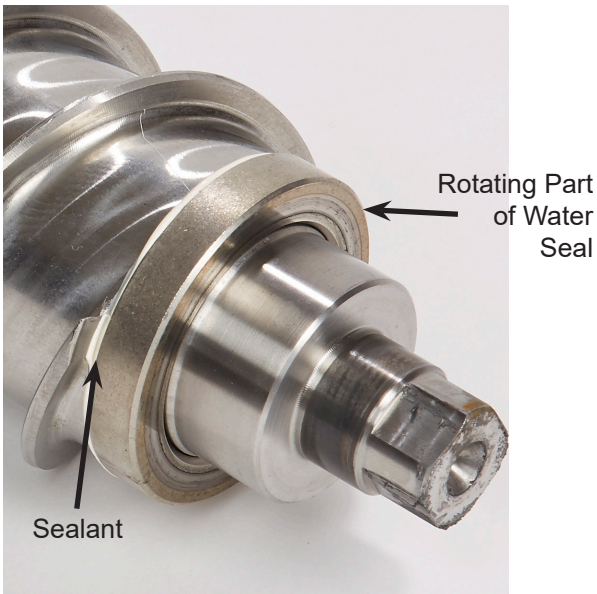

7. Carefully push the new rotating half of the water seal up against the sealant as far as possible. It should seat tightly and straightly against the auger shoulder. Do not put fingerprints on the sealing surface.
8. Wet the outside edge of the stationary half of the water seal and insert it into the bottom of the evaporator.
9. Slip the evaporator onto the bottom bearing retainer, the bearing retainer will push the water seal up into the correct position.

Note: The bottom bearing should have been replaced at this time. (see page 25)

10. Secure the evaporator to the bearing retainer with the original socket head screws. Be sure they are tight.

Note: The high speed non-metallic fiber gear is the only internal part that is a service part and can be replaced individually. If any other parts of the gear reducer are damaged or it is discovered that water has infiltrated the gear reducer, the entire assembly will need to be replaced.

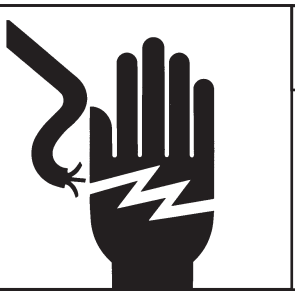

⚠WARNING

Electrical Shock Hazard

Disconnect electrical power before beginning

1. Remove the electrical wires from the gear drive motor.

2. Unscrew the 4 1/2” hex head cap screws holding the evaporator adapter to the gear reducer.

3. Remove the gear reducer from the ice machine. It is recommended to support the evaporator assembly to ensure no damage to refrigerant lines.

To Inspect the gear reducer:

1. Remove the cap screws holding the gear reducer case halves together and pry the two cases apart.

2, To lift off the cover, lift up until you can feel internal contact, then pull the cover towards the output gear end, and then lift the cover (with drive motor attached) up and away from the gear reducer case.

3. Inspect the oil, gears, and bearings. If the oil level and condition is acceptable, quickly check the gears and bearings. They are likely to be fine if the oil is.

If there is evidence of water in the oil (rusty bearings and gears; the oil having a creamy white appearance; oil level too high) carefully inspect the bearings and gears. If in doubt about the condition of a part, replace it. The oil quantity is 14 fluid ounces, do not overfill.

4. After inspecting gear reducer and replacing high speed non-metallic fiber gear if required, reassemble the gear case and cover.

5. After the gear case is together, replace all cap screws.

6. Check oil level. Remove red vented plug from gearbox. Using a flathead screwdriver, check the oil level using the vent hole between the motor and the freezer. About 3/8” of oil should be on the tip of the screwdriver blade. Any more and there may be water in the gear case, any less and it may be low. The correct oil charge is 14 ounces.

7. Bench test the gear reducer, check for oil leaks, noise, and amp draw.

(Assuming all the steps for removal of the bearings, extruder, auger, and water seal have been performed.)

1. Recover the refrigerant from the ice maker.

2. Unsweat the refrigerant connections:

a) At the thermostatic expansion valve outlet.

Heat sink the TXV body when unsweating or resweating the adjacent tubing.

b) At the suction line at the joint about 3" from the evaporator.

3. Remove the evaporator.

4. Unsweat the drier from the liquid line.

5. After installing a new water seal in the new evaporator (see “To Replace the Water Seal”) sweat in the new evaporator at the old tubing connections.

6. Install an new drier in the liquid line.

7. Evacuate the system until dehydrated, then weigh in the nameplate charge. Check for leaks.

8. Install auger, extruder, extruder bearing assembly, and ice discharge chute in reverse order of disassembly.

To Reassemble the Evaporator and Auger

1. After the gear reducer has been inspected, fasten the evaporator to the gear reducer. Torque the bolts to 110 inch pounds.

2. Lower the auger into the evaporator barrel, slightly turning it to match up with the drive end. Do Not Drop Into the Evaporator.

3. Complete the reassembly by reversing the disassembly for the extruder & bearing assembly.

SCOTSMAN ICE SYSTEMS

101 Corporate Woods Parkway

Vernon Hills, IL 60061

800-726-8762

www.scotsman-ice.com